WORKSTATION ONDA

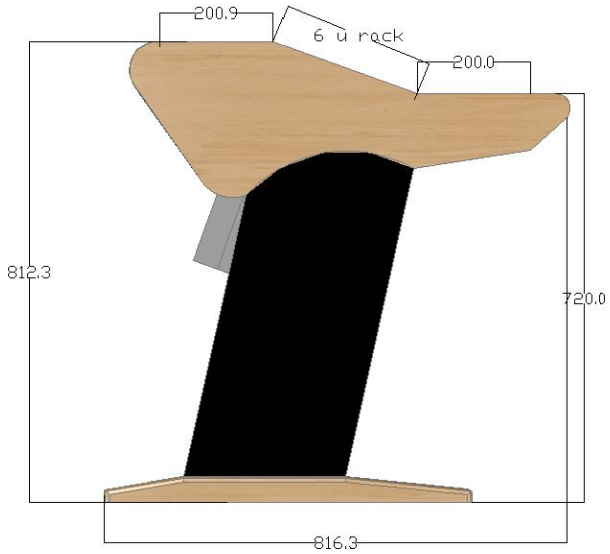

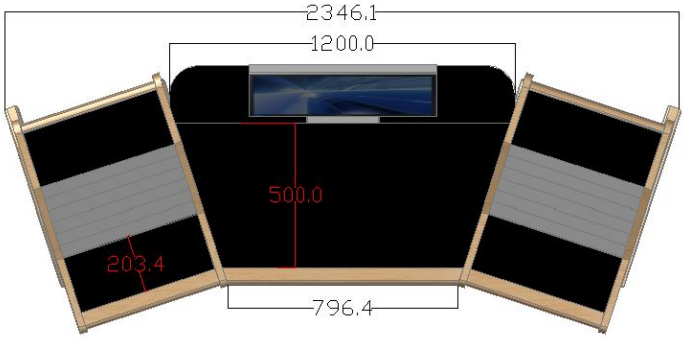

ONDA 120

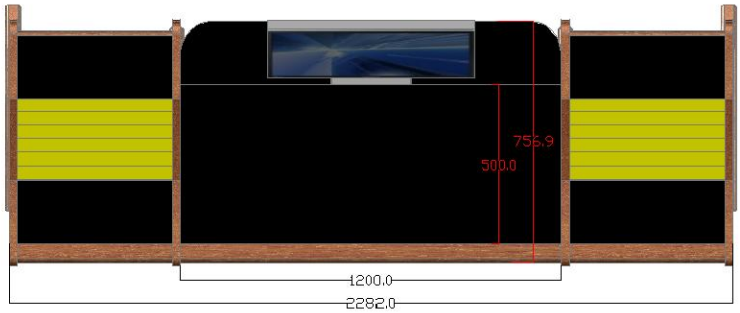
756.9
500.0
1200.0
2282.0

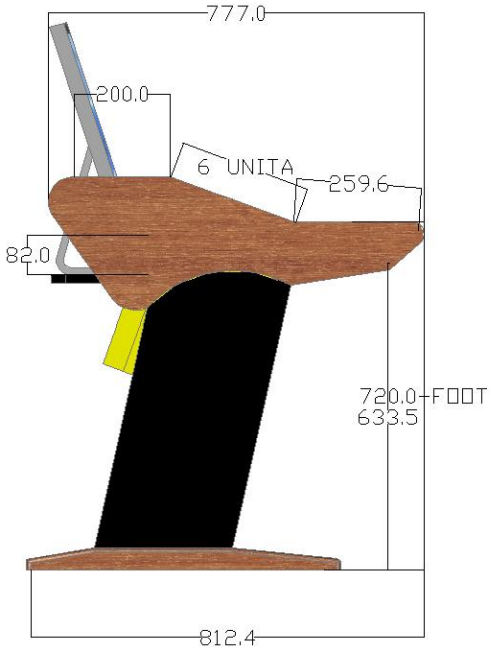
777.0
200.0
6 UNITA
259.6
82.0
720.0 FOOT
633.5
812.4